NFV ISG PoC Proposal

A.1 NFV ISG PoC Proposal

A.1.1 PoC Team Members

- Include additional manufacturers, operators or labs should additional roles apply.
- PoC Project Name: Mapping ETSI-NFV onto Multi-Vendor, Multi-Domain Transport SDN
- Network Operators/ Service Providers: Verizon Contact: Vishnu Shukla
- Network Operators/ Service Providers: Telefonica Contact: Victor Lopez
- Research Centre: CTTC Contact: Ricard Vilalta
- Manufacturer A: NEC/ Netcracker Contact: Hiroshi Dempo
- Manufacturer B: ADVA Contact: Konrad Mrówka
- Manufacturer C: Ciena Contact: Lyndon Ong
- Manufacturer D: Coriant Contact: Jonathan Sadler
- Manufacturer E: Infinera Contact: Srini Seetharaman
- Manufacturer F: Juniper Contact: Peter Landon
- Manufacturer G: Sedona Contact: Itay Maor
- Manufacturer H: SM Optics Contact: Francesco Bosisio

A.1.2 PoC Project Goals

- PoC Project Goal #1: __The PoC will demonstrate connectivity services of the SDN-based WAN configured by transport SDN controllers and network devices, referred to as multi-site services in IFA022, ETSI-NFV.
- PoC Project Goal #2: __The PoC will demonstrate interactions between WIM (emulated) and transport SDN controller, which would be applicable to Nf-Vi reference point of the ETSI-NFV MANO framework.
- PoC Project Goal #3: __The PoC will report complemented analysis about the connectivity service for multiple sites, being discussed in IFA022.

A.1.3 PoC Demonstration

- Venue for the demonstration of the PoC: Verizon Lab, Waltham, MA USA
- Venue for the demonstration of the PoC: Telefonica Lab, Madrid, Spain

A.1.4 Publication

Publication of PoC results outside the ISG is encouraged to enable peer review, to avoid duplication of PoC proposals and to enable others to build on the PoC outcomes. Publication of PoC results is not mandatory and is not a selection criterion, but if you are proposing publication, please provide the following information:

- What would be the publication channel(s) for the PoC. OIF/ONF White Paper, OFC
- What would be the planned publication date(s)? Mar/ 2017
- URLs where applicable: http://www.oiforum.com/meetings-and-events/2016-oif-sdn-t-api-demo/

A.1.5 PoC Project Timeline

- What is the PoC start date? October 18, 2016
- (First) Demonstration target date Optical Fiber Communication Conference and Exhibition (OFC), Mar/ 2017
- PoC Report target date End of March, 2017
- When is the PoC considered completed? End of March, 2017

A.2 NFV PoC Technical Details

A.2.1 PoC Overview

In ETSI-NFV, IFA022 studies connectivity service instantiations between different NFVI-PoPs for the Network Service Life Cycle Management. The use cases are represented by multiple sites, hosting NFVI-POPs, which are interconnected over a Wide Area Network (WAN) infrastructure [NFVMAN001]. In this context, a Network Service, which is a composition of Virtual Network Functions, is instantiated by the interactions among OSS/BSS, NFVO, WIM/VIM, and Network Controllers. The current IFA022 analyses the interactions among OSS/BSS, NFVO, WIM/VIM with reference to the current ETSI-NFV standards specifications, but it also needs external examples and references about the interactions with Network Controller and underlying WAN infrastructure in order to understand, identify and specify the requirements of the WIM, which may not be obvious within the existing scope of IFA022. This becomes all the more relevant as the multi-site Network Service composition requirements comes from the MANO components above the WIM. Moreover, the connectivity properties in the underlying transport network may need to be exposed to the NFVO and hence the OSS/BSS.

In view of the above considerations, the objective of this PoC is to demonstrate a connectivity life cycle management with SDN-based Network Controllers over WAN interconnections that are interfaced with the WIM. As shown in Figure 1, the PoC is architecturally configured by a network controller, interfacing with WIM, and Wide Area Network (WAN) infrastructure. The WAN interconnects multiple ETSI-NFV sites. Based on this PoC it is expected to gain valuable experiences that will enable us to not only derive the requirements on WIM towards the Network controller but also derive requirements on WIM from/towards the NFV-MANO functional components.

For the implementation of the PoC a Transport API [ONFTR522] [ONFTR527] [ONFTAPI], called TAPI, implements a set of northbound application interfaces of the network controller. Based on select use case from IFA022, topology and connectivity services shall be implemented and tested. The topology service can be used when WIM explores a set of connectivity end points whose requirements may be specified from OSS\BSS and\or NFVO (e.g. affinity group, location constraint). The topology service can also be used when WIM may collect WAN QoS parameters (e.g. capacity, latency, cost, etc) that shall satisfy the Network service QoS requirements as imposed by the OSS/BSS and\or NFVO. WIM may be asked to collect network QoS parameters via Or-Vi reference

point by NFVO. The connectivity service can be initialized when WIM executes path instantiation. Two or more end points given by the WIM are then interconnected with the connectivity service.

In our proposed PoC, a network infrastructure is configured by multiple networks of individual vendors. A domain controller is responsible for a network infrastructure. A multi-domain controller is responsible for end-to-end connectivity of the network infrastructure. The multi-domain controller implements the TAPI interface to WIM.

As studied in ETSI-NFV [EVE005], the multi-domain controller can be configured with hierarchical model. There is no WIM implementation in ETSI-NFV but, by leveraging this feature, interactions between WIM and Network Controller can be emulated and tested in our PoC. A higher multi-domain controller works as a WIM instance and a lower multi-domain controller works as a Network Controller instance. Transport API specification can be used for the reference point between WIM and Network Controller.The PoC will consist of, at the minimum, a carrier lab, where the test-bed will be located hosting at least one multi-domain controller and two domains.

[NFVMAN001] ETSI GS NFV-MAN 001: “Network Functions Virtualisation (NFV); Management and Orchestration”

[NFVEVE005] ETSI GS NFV-EVE005: “Network Functions Virtualisation (NFV); Ecosystem; Report on SDN Usage in NFV Architectural Framework”

[ONFTR522] ONF TR-522 “SDN Architecture for Transport Networks”

[ONFTR527] ONF TR-527 “Functional Requirements for Transport API”

[ONFTAPI] ”Repository for Open Transport API Project”, https://github.com/OpenNetworkingFoundation/Snowmass-ONFOpenTransport

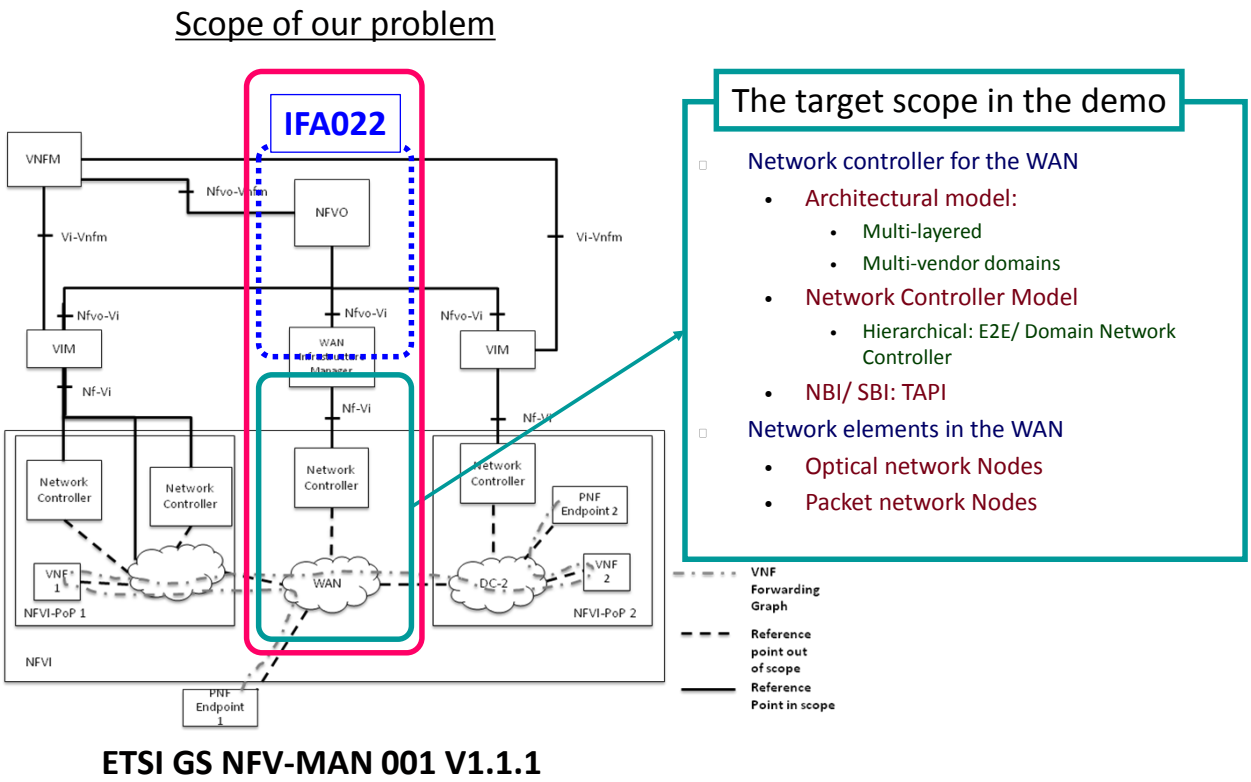

Figure 1 Scope of our demonstration in the PoC

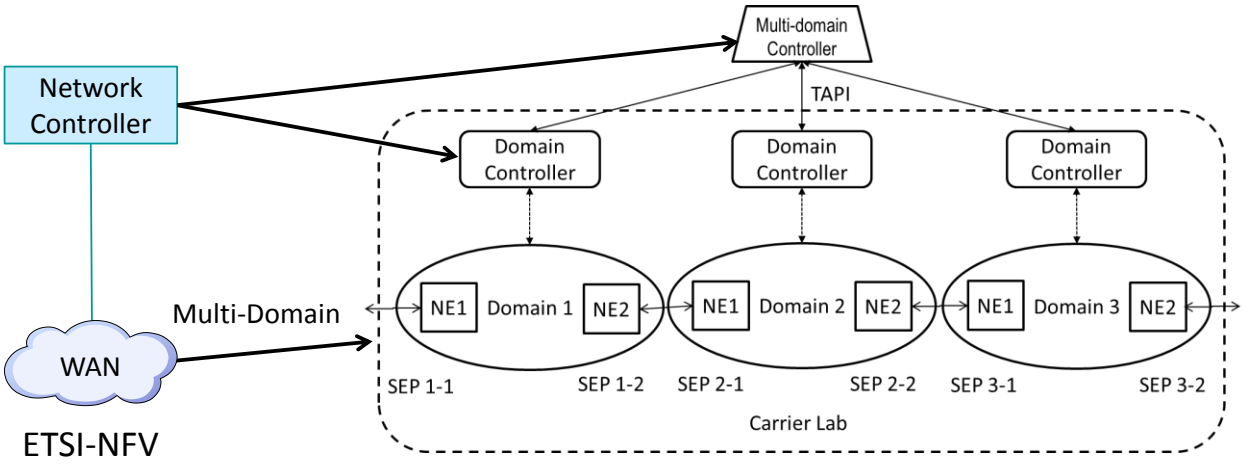

Figure 2 Mapping of the WAN architecture into our PoC model

A.2.2 PoC Scenarios

- Scenario 1: Topology service

Topology service returns topology network information.

Pre-condition: Multi-domain controller needs to discover each domain topology.

Operational Flows: A multi-domain controller calls a topology API on each domain controller to get a topology network information.

Post-condition: The multi-domain controller learns about the network topology of each domain, and builds an overall view of the multi-domain network infrastructure.

- Scenario 2: Connectivity service in a single domain

Connectivity service installs network configurations into the network infrastructure configured by multiple domains.

Pre-condition: There is no connectivity services installed inside the multi-domain network infrastructure.

Operational Flows: Referring to the topology, a connectivity service on the multi-domain controller is invoked. In the API call, a pair of service end points is given to the multi-domain controller. The multi-domain controller computes an optimal path over the multiple domains for the invocation of multi-site connectivity. If computed, the multi-domain controller then invokes connectivity service APIs on the domain controllers. In the same way, each domain controller determines and configures an optimal path within its respective domain.

- Scenario 3: Interactions between WIM and Network Controller by leveraging hierarchical multi-domain controllers

Interactions between WIM and Network Controller are emulated by our hierarchical multi- domain controllers

Pre-condition: As described, our multi-domain controller can be configured with hierarchical model. By leveraging this feature, a higher multi-domain controller works as an emulated WIM instance and a lower multi-domain controller works as a Network Controller instance.

Operational Flows: A multi-domain controller calls a topology API on each domain controller and configures an abstract view of the multi-domain. The view is exposed to the emulated WIM. The emulated WIM gets topologies from the multi-domain controller. The overall network view is configured by the emulated WIM. In the same way, connectivity service is installed in the network infrastructure.

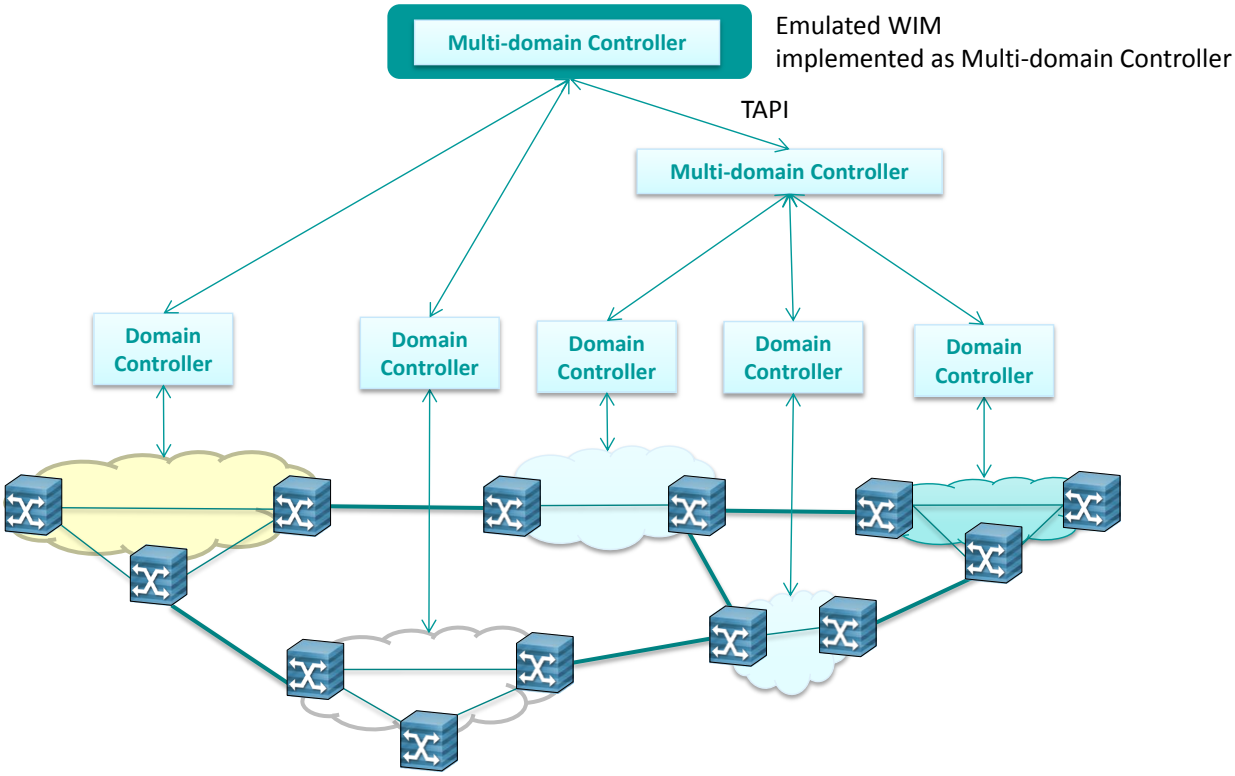

Figure 3 A PoC model for interactions between WIM and Network Controller

A.2.3 Mapping to NFV ISG Work

Describe how this PoC relates to the NFV ISG work:

1) Specify below the most relevant NFV ISG end-to-end concept from the NFV Use Cases, Requirements, and Architectural Framework functional blocks or reference points addressed by the different PoC scenarios:

	Use Case	Requirement	E2E Arch	Comments
Scenario 1	*UC#2*	*Gen.4* *OaM.5* *Mod.5*	*Nf-Vi* *Network Controller*	*Implement Nf-Vi with TAPI* *Network topology need to be collected before network connectivity is installed.*
Scenario 2 **Scenario 3**	*UC#2*	*Gen.4* *OaM.5* *Mod.5*	*Nf-Vi* *Network Controller*	*Implement Nf-Vi with TAPI* *Operational flow relates to a life cycle management of a virtual link, especially in a procedure to create and configure a connection*

				between VMs.

2) (Optional) If this PoC intends to solve or validate any challenge or ongoing work in NFV ISG Work Items, complete the table below:

	Work Items	**Comments**
Scenario 1 **Scenario 2** **Scenario 3**	*Multi-Site Services Report, IFA022*	*IFA022 focuses on the use cases and requirements about WIM and its north bound interfaces. This PoC will help the study about the south bound interface and whole operational flows in the WAN connectivity service between the multiple sites.*

A.2.4 PoC Success Criteria

Demonstration of the Inter-operability of TAPI is the success of this PoC. In scenario1, multi-domain and domain controllers from different manufacturers are deployed in different carrier labs. The multi-domain controller then takes topology information from domain controllers with TAPI interfaces. In scenario 2, the multi-domain controller determines a pair of service end points, computes the optimal path, and then deploys the connectivity service via domain controllers. In scenario 3, interactions between an emulated WIM and Network Controller are demonstrated.

A.2.5 Expected PoC Contribution

One of the intended goals of the NFV PoC activity is to support the various groups within the NFV ISG. The PoC Team is therefore expected to submit contributions relevant to the NFV ISG work items as a result of their PoC Project.

List of contributions towards specific NFV ISG WIs expected to result from the PoC Project:

- PoC Project Contribution #1: Topology and connectivity service NFV WI IFA022 Multi-site services