Welcome to the World of Standards

ETSI

World Class Standards

COLLABORATION WITH OPEN SOURCE

Connection Points Between OpenStack and ETSI NFV TST Working Group

Lynch Pierre
(TST WG Chair)

Gergely Csatari
(TST WG Contributor)

What is ETSI NFV TST WG?

TST is one of several working groups under the ETSI NFV Industry Specification Group (ISG)

- Responsibilities:
  - Testing
  - Proofs of Concept
  - Open Source collaboration
- A productive and collaborative team (albeit being relatively small compared to other working groups)
- Participants include telecom operators, vendors and testing companies

TST Areas of Focus

- Testing the NFV functional blocks: VNF, MANO and NFVI
- Creating NFV Proof of Concept (PoC) and Interoperability guidelines
- Analyzing gaps between open source projects and the ETSI NFV architecture

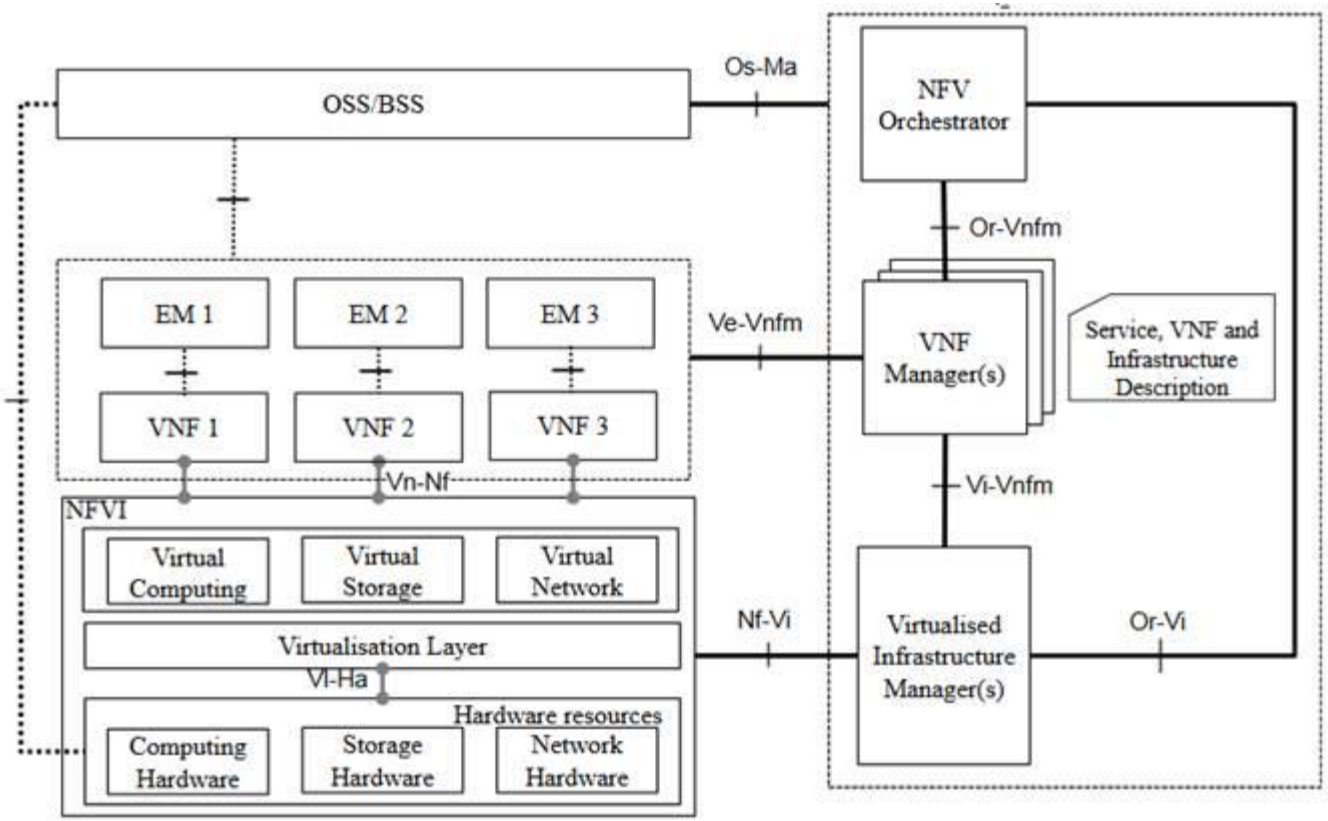

TST001 – Pre-deployment Testing

Published

- Assessing the performance of the NFVI and its ability to fulfil the performance and reliability requirements of the VNFs executing on the NFVI.
- Data and control plane testing of VNFs and their interactions with the NFV Infrastructure and the NFV MANO.
- Validating the performance, reliability and scaling capabilities of Network Services.
- NFVI pre-deployment validation part was developed in cooperation with OPNFV Yardstick

TST002 – NFV Interop Testing Methodology

Published

- Guidelines for NFV interoperability testing
- Generic System Under Test (SUT) architecture for NFV
- Initial SUT configurations
- Interoperability feature areas

TST003 – Open source components

Published

Identifying gaps between OpenStack NBI and IFA005/IFA006

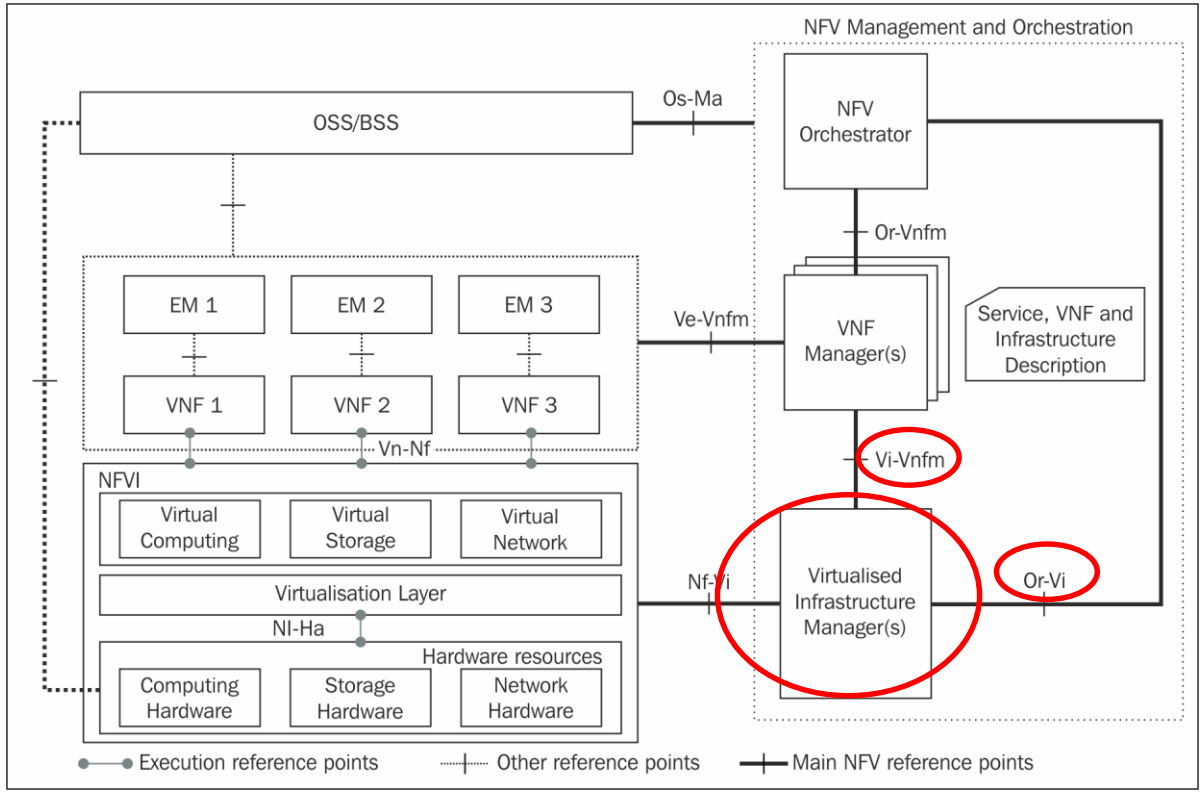

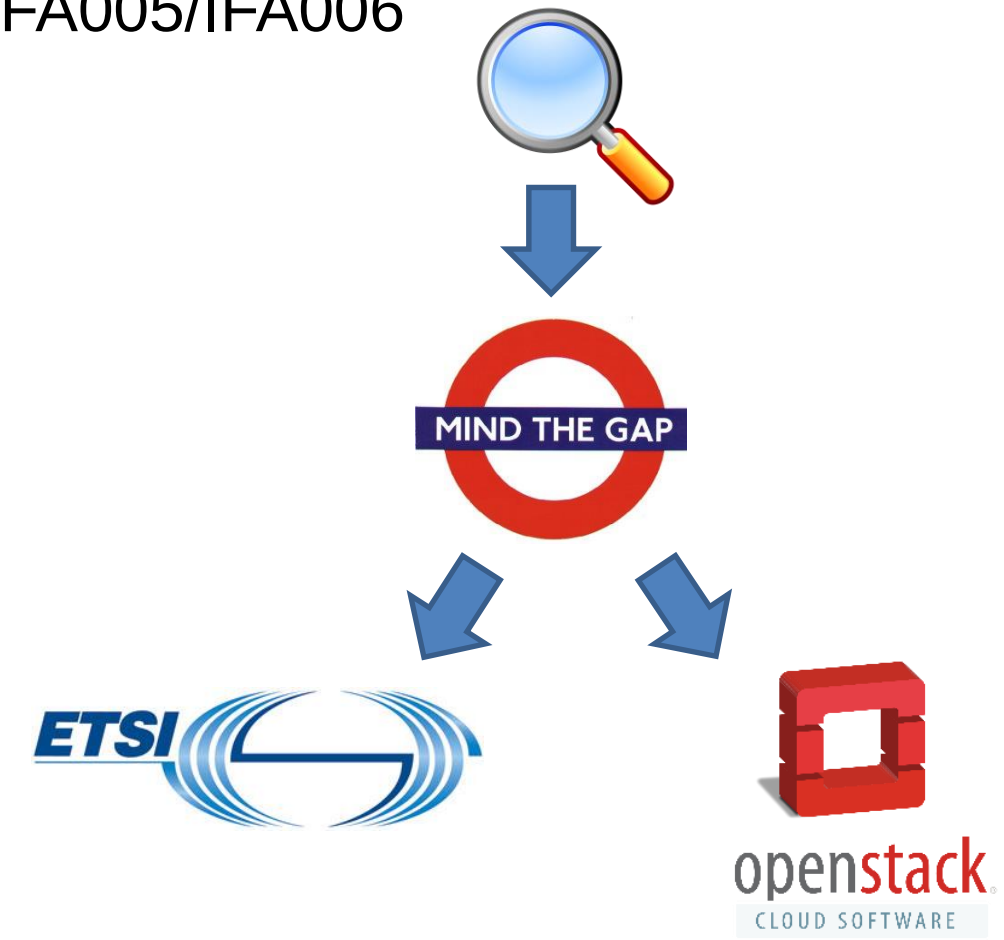

TST004 – Path implementation testing

Published

- Guidelines for test plan on path implementation through NFVI
- SUT options
  - Function placement
  - SDN application type
  - SDN controller type
- Metrics
  - VNFC instantiation time
  - Path instantiation
  - 1st packet latency
  - Std pkt transfer measurements
- Procedures
- Examples

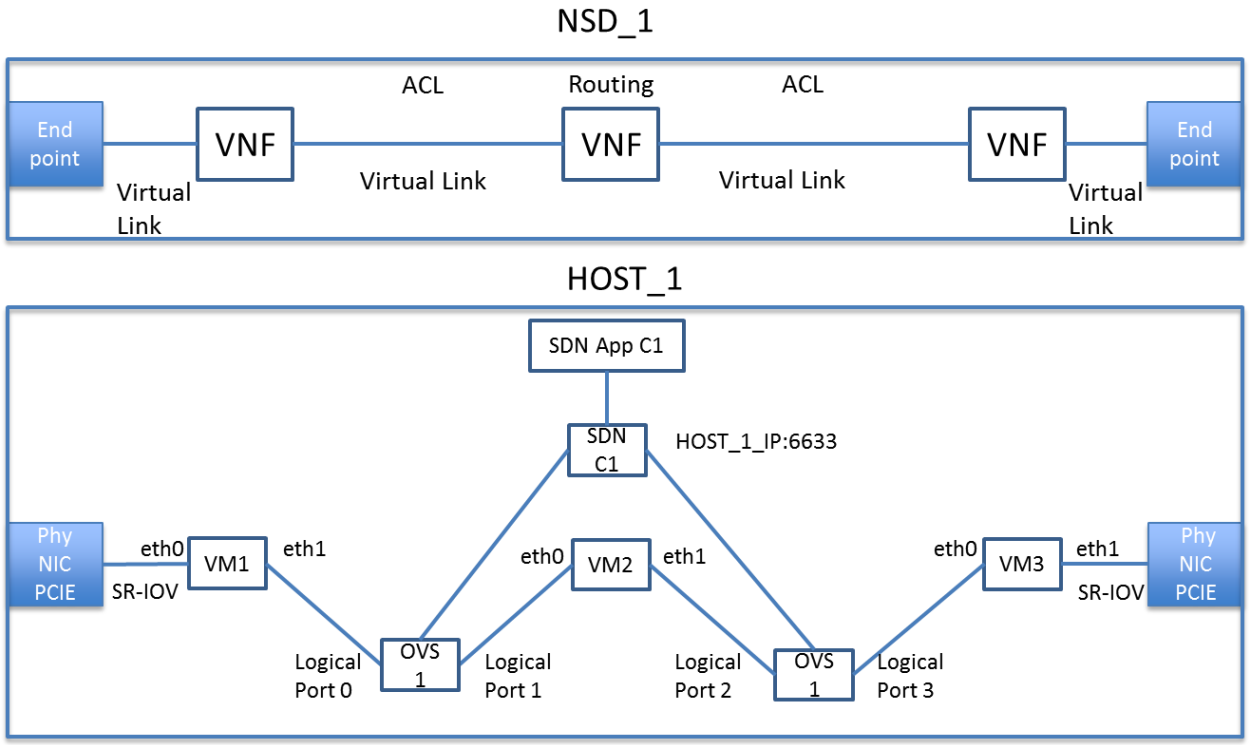

TST005 – VNF Snapshot report

Published

- Report on use cases and recommendations for VNF Snapshot
- Use cases:
  - Testing
  - Troubleshooting
  - Lifecycle management
    - During VNF lifecycle procedure
    - Quick VNF recovery
- Gap Analysis with existing solutions
- Framework, procedures and solutions
- Recommendations to IFA specifications
  - Policies, Fct Reqs on MANO, Ref Points

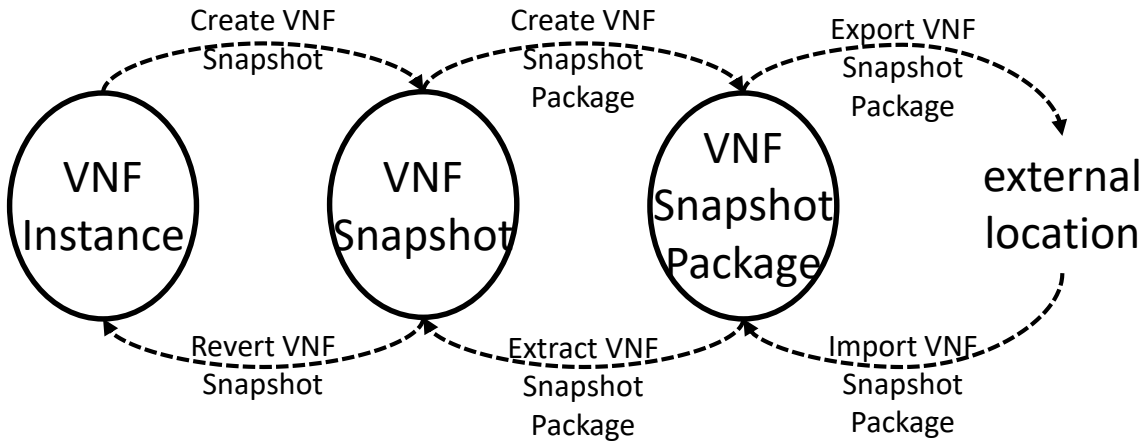

TST006 – DevOps and CI/CD

Draft

- Usage of DevOps and CI/CD in Telco environment
  - Focus on the handoff of VNF
- Background and overview
- Use cases
  - Supplier
  - Operator
  - Validator
- Test procedures
- Recommendations for package description enhancements

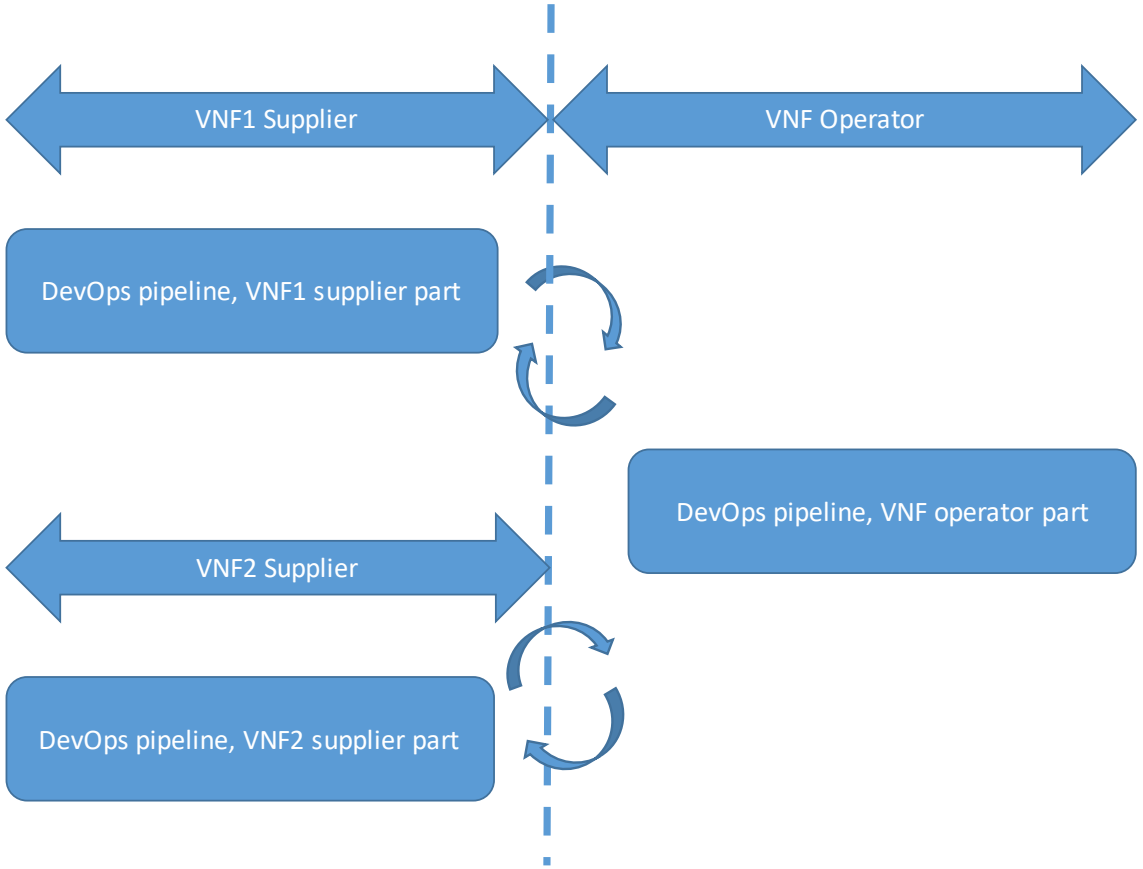

TST007 – Guidelines for interop

Draft

- Interoperability Testing Guidelines for NFVI-VIM, MANO and VNF
- Detailed collection of test descriptions for most functionality
- Based on TST002 and 1st NFV Plugtests Test Plan

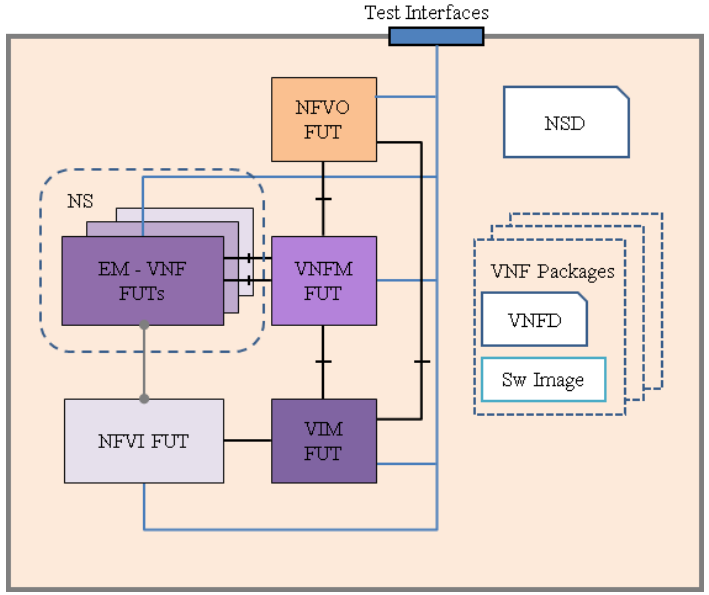

Test Description: NS scale out with an operator action				
Identifier	TD_NFV_NS_LCM_SCALE_OUT_001			
Test Purpose	Verify that the NS can be successfully scaled out by adding VNF instances triggered by an operator action			
Configuration	SUT Configuration 1			
References	IFA005, IFA006[1], IFA007, IFA008, IFA010, IFA013			
Applicability	• NFVO/VNFM can request VIM to allocate virtualised resources • VIM supports allocating virtualised resources • NFVO supports triggering scale out with an operator's action • NFVO supports scale out by adding VNF instances • NS/VNF supports scale out by adding VNF instances			
Pre-test conditions	• NS is instantiated (TD_NFV_NS_LCM_INSTANTIATE_001) • NFVI has the required amount of consumable virtual resources to run the scaled-out NS			
Test Sequence	**Step**	**Type**	**Description**	**Result**
	1	Stimulus	Trigger NS scale out by adding VNF instances to the NS in NFVO with an operator action	
	2	IOP Check	Verify that the additional VNF instance(s) have been deployed by querying the VNFM	
	3	IOP Check	Verify that the additional resources have been allocated by the VIM according to the descriptors	
	4	IOP Check	Verify that the additional VNF instance(s) are running and reachable via their management network	
	5	IOP Check	Verify that the additional VNF instances(s) have been configured according to the descriptors by querying the VNFM	
	6	IOP Check	Verify that the additional VNF instances(s), VL(s) and VNFFG(s) are connected according to the descriptors	
	7	IOP Check	Verify that the NFVO indicates the scaling	

TST008 – NFVI Compute and Network Metrics Specification

Published

- Compute, Networking and Memory metrics for NFVI
- Each Metric:
  - Name & Background
  - Parameters & Scope
  - Units & Method of Measurement
  - Definition
  - Sources of Error, Discussion
- Will be referenced by IFA027
- Compute: Processor usage, utilization
- Network: Packet, Octet, Dropped Packet, Errored Packet Counts
- Memory: Buffered, Cached, Free, Slab
- Done in cooperation with OPNFV Barometer

TST009 – Testing Specification of Networking Benchmarks and Measurement Methods for NFVI

Draft

- Initial stages
- Vendor-agnostic definitions of performance metrics and the associated methods of measurement for Benchmarking networks supported in the NFVI
- Intended to serve as a basis for fair comparison of different implementations of NFVI
- Possible cooperation with OPNFV vsperf


OPNFV
PLUGFEST

+


PLUGTESTS™
INTEROP EVENTS

OPNFV Dovetail + ETSI NFV TST

Potential new Work Item

- Reliability/Resilience testing
- Testing
  - Recovery from faults
  - Long duration tests
  - Negative testing
- Focus on
  - Metrics to be measured
  - How to measure them

ETSI NFV TST interworking with open source

- Testing is a natural area for collaboration between ETSI NFV and open source projects
- ETSI NFV is happily doing test plans, reports and specification and let the open source projects to do the implementations
- TST WG is looking for feedback on ETSI NFV, but there is also a bug tracker

ETSI

THE LINUX FOUNDATION

Linux Foundation Networking and Orchestration White Paper:

Harmonizing Open Source and Standards in the Telecom World

A Publication of The Linux Foundation
May 2017

ETSI

World Class Standards

More information:

NFV Technology Page (information)
http://www.etsi.org/nfv

NFV Portal (working area)
http://portal.etsi.org/nfv

NFV Proofs of Concept (information)
http://www.etsi.org/nfv-poc

NFV Plugtest (information & registration)
http://www.etsi.org/nfvplugtest

Open Area:

Drafts http://docbox.etsi.org/ISG/NFV/Open/Drafts/

Issue tracker http://nfvwiki.etsi.org/index.php?title=NFV_Issue_Tracker

Acknowledgements

This material was created using

- NFV(17)000135 by Silvia Almagia
- NFV (17)000121r1 by Pierre Lynch

and other works of the TST WG